SOLARTECH

WHERE SOLAR MEETS ART & TECHNOLOGY

Solar Energy South Africa

Norway fraunhofer solar panel

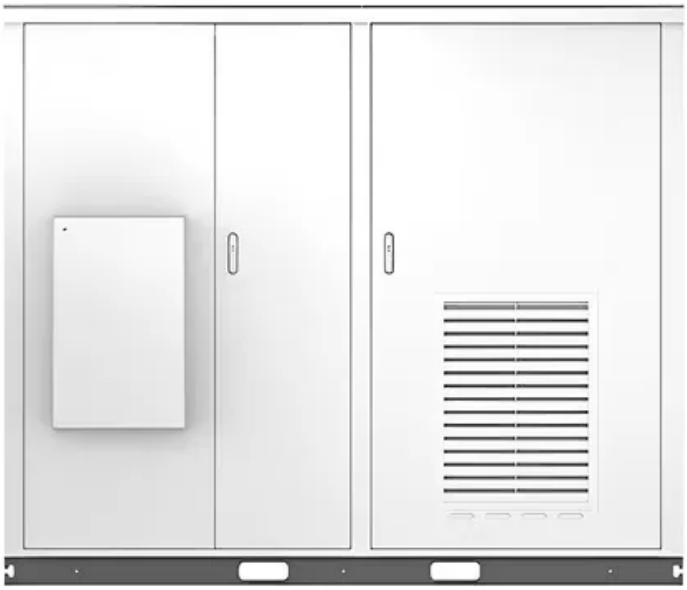

Norway fraunhofer solar panel

Heating solar panels to clear snow - pv magazine International

Norway ; The developer says the system is ideal for mid-size and large commercial rooftop arrays. "Heavy snow loads combined with existing solar panel installations can weaken roofs and lead

New world record solar panel efficiency

The manufacturer of this solar panel has begun the formal process of certifying the solar panel's 25 year longevity as this product type (perovskite+silicon) hasn't yet shown in the field longevity. The Fraunhofer cell won't be coming anywhere close to mainstream in the next decade, though: someone more knowledgeable told me that we're

New standard for ultra-low carbon solar modules released

To confirm the inputs for each solar panel and obtain certification from the GEC, independent third-party inspectors must verify the inputs. Much of the GEC's documentation covers the third-party verification process. NorSun, REC Solar Norway Fraunhofer, Meyer Burger, and Wacker Chemie. JinkoSolar recently announced a

Solarts

Solar Technologies Scandinavia is one of Norway's leading suppliers in solar panels and battery storage. The company was founded by key personnel with extensive experience from the construction industry and as technical suppliers. We offer training at all levels of competence in assembly, engineering and all applicable regulations.

Chinese solar module makers announce new TOPCon plans

A TOPCon cell developed at Fraunhofer ISE Fraunhofer Institute for Solar Energy Systems (ISE) DAH Solar is ramping up TOPCon solar cell and module capacity at its factory in Chaohu, in China's Anhui province.The company aims to produce 5.5 GW of cells and 2.5 GW of modules by the end of 2023.

Fraunhofer Center confirms IBC SOLAR panels

The Fraunhofer Center for Silicon Photovoltaics CSP recently conducted LeTID tests on IBC SOLAR solar modules, examining their loss of power of in the event of sustained strong incidence of light or high temperatures. All of the IBC SOLAR modules selected by Fraunhofer CSP are characterized by very low degradation and IBC received a quality ...

The Environmental Impact of Solar Panel Production

Contents1 Introduction2 Historical Background3 Key Concepts and Definitions4 Main Discussion Points4.1 Environmental Impacts of Raw Material Extraction4.2 Manufacturing Processes and

Energy Consumption4.3 Waste Management and End-of-Life Considerations4.4 Impacts on Ecosystems and Biodiversity5 Case Studies or Examples6 Current Trends or ...

At InterSolar 2019, Fraunhofer ISE Unveiled Bifacial Shingle Solar ...

About Solar Edition. Solar Edition is a small non-profit Solar Energy Influencer organization, from Norway. Our mission is to expand use of solar energy. Our focus is to reach our mission via "Education", "Media" and "Sustainable Business Development", as we believe "lack of awareness" is the missing links in a Sustainable Future. We believe in making the ...

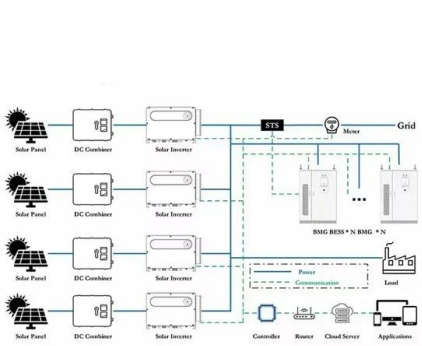

Solar power for sustainable research

The Wildau research building of the Fraunhofer IAP has been equipped with a photovoltaic system. Across an area of 220 square meters, 110 solar modules generate a peak output of around 50 kilowatts (kWp). The system will generate about 15 percent of the annual energy needs of the Fraunhofer IAP at the Wildau site.

Center for High Efficiency Solar Cells

Fraunhofer ISE holds several world records in the high efficiency solar cell sector, such as the

record efficiency value for both-sides contacted silicon solar cells (26 %) and the top efficiency of 47.6 % for a four-junction solar cell based on a III-V multi-junction cell architecture.

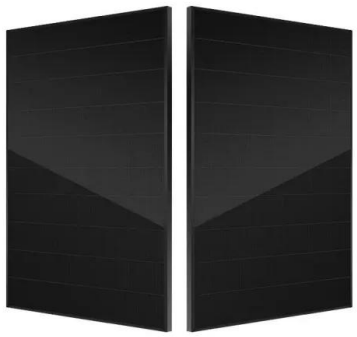

Solar energy shines in Norway

Norwegian companies produce small-scale solutions that make people's lives easier. BRIGHT Products, for example, manufactures some of the best solar powered lamps on the global market, which gather energy during the day and provide light after the sun has set.The company is directly advancing the UN Sustainable Development Goals through its work with ...

Anti-ice coatings

The Fraunhofer lighthouse project "FutureProteins" develops coupled agricultural systems for a resilient and sustainbale production of high-quality food proteins; which in winter freeze or become unbalanced due to ice formation, on solar panels, power lines, building parts, textiles or sports equipment. An application which is easy to

Global Electronics Council releases new standard for ultra-low ...

To confirm the inputs for each solar panel and obtain certification from the GEC, independent third-party inspectors must verify the inputs. NREL, NorSun, REC Solar Norway Fraunhofer,

Meyer Burger, and Wacker Chemie. Authored by JOHN FITZGERALD WEAVER. This content is protected by copyright and may not be reused.

Solar System Installers in Norway , PV Companies List , ENF ...

Norwegian solar panel installers - showing companies in Norway that undertake solar panel installation, including rooftop and standalone solar systems. 64 installers based in Norway are listed below. Solar System Installers. Norway. Company Name Region Battery Storage

Oxford PV achieves solar panel world-record with 26.6% efficiency

Oxford PV said the efficiency was certified by the photovoltaic calibration laboratory at the Fraunhofer ISE (Fraunhofer CalLab), which provides measurement services for solar cells and modules. The 60-cell double-glass module, with a designated area of just over 1.6 square metres, weighs under 25 kilograms and is "an ideal size for

Wind load , Vertical bifacial solar PV installations

We've installed vertical solar panel research installations on rooftops in different climates

from Tromsø in the north of Norway to Alicante in Spain. CFD simulations performed by Fraunhofer ISE on real size systems show that, even at wind speeds of up to 47 m/s, no lift is expected for the configuration of Over Easy Solar's vertical PV

Top Solar Panel Manufacturers Suppliers in Norway

Wholesale Solar Panels For Sale Homeowners and all types of businesses these days are seeking ways to cut down on their power consumption bill and reduce the overall operational cost. For this purpose, solar energy is the best alternative for them to be cost-effective and energy-efficient. In the upcoming decade, energy costs are estimated to become double. Solar panels ...

Solarmodule , Photovoltaiksysteme , Produkte , KYOCERA Germany

Solarmodule von Kyocera sind PID-resistent, dies bestätigt das Fraunhofer-Institut. Das Fraunhofer-Center für Silizium-Photovoltaik CSP (Halle, Deutschland) belegte in seinen vorgestellten Testergebnissen von 2012 zur potentialinduzierten Degradation (PID), dass die Module von Kyocera nach einem Hochspannungsbelastungstest keine Anzeichen von ...

TestLab PV Modules

The Fraunhofer Institute for Solar Energy

Systems ISE and VDE Renewables have combined their expertise and established a joint service platform for manufacturers, installation companies and distributors. In the Fraunhofer TestLab PV Modules, which was founded in 2006 by Fraunhofer ISE in Freiburg, PV modules are tested according to IEC and

Fraunofer ISE, Heckert Solar present Made-in-Germany rooftop solar panel

Fraunhofer Institute for Solar Energy Systems (Fraunhofer ISE) and Heckert Solar have developed a rooftop solar panel in Germany. The 400 W module, featuring M12 half cells, boasts an efficiency

Fraunhofer ISE entwickelt effizienteste Solarzelle der Welt mit 47,6

Forscherinnen und Forschern am Fraunhofer-Institut für Solare Energiesysteme ISE ist es gelungen, mit Hilfe einer neuen Antireflexbeschichtung die Effizienz der bisher besten Vierfachsolarzelle von 46,1 auf 47,6 Prozent bei 665-facher Sonnenkonzentration zu erhöhen.

Oxford PV achieves solar panel world-record with ...

Oxford PV said the efficiency was certified by the photovoltaic calibration laboratory at the Fraunhofer ISE (Fraunhofer CalLab), which provides measurement services for solar cells

and modules. The 60-cell double-glass ...

European Quality: REC Solar Panels Perth

REC is a premium European manufacturer with production facilities in Singapore and belongs to the most innovative solar panel manufacturers in the world. With company headquarters in Norway and operational headquarters in Singapore, REC is leading the way with the world's most powerful multicrystalline solar power modules.

The world's first large scale hybrid hydro-floating solar power ...

The Norwegian government has decided to support, with NOK79 million ($9.1 million), a research project led by Norway-based renewable energy developer Scatec and aimed at developing a large scale

Contact Us

For catalog requests, pricing, or partnerships, please visit: https://ian-solar.co.za